Martelli EDGE
Island Extractor
Installation, Operation and Maintenance

CONTENTS

INTRODUCTION	2
IMPORTANT INFORMATION	2
EXTRACTION PERFORMANCE	2
INSTALLATION	3
ILLUSTRATIONS	6
REMOTE MOTOR WIRING	7
OPERATING INSTRUCTIONS	8
MAINTENANCE	10
SPECIFICATIONS	11

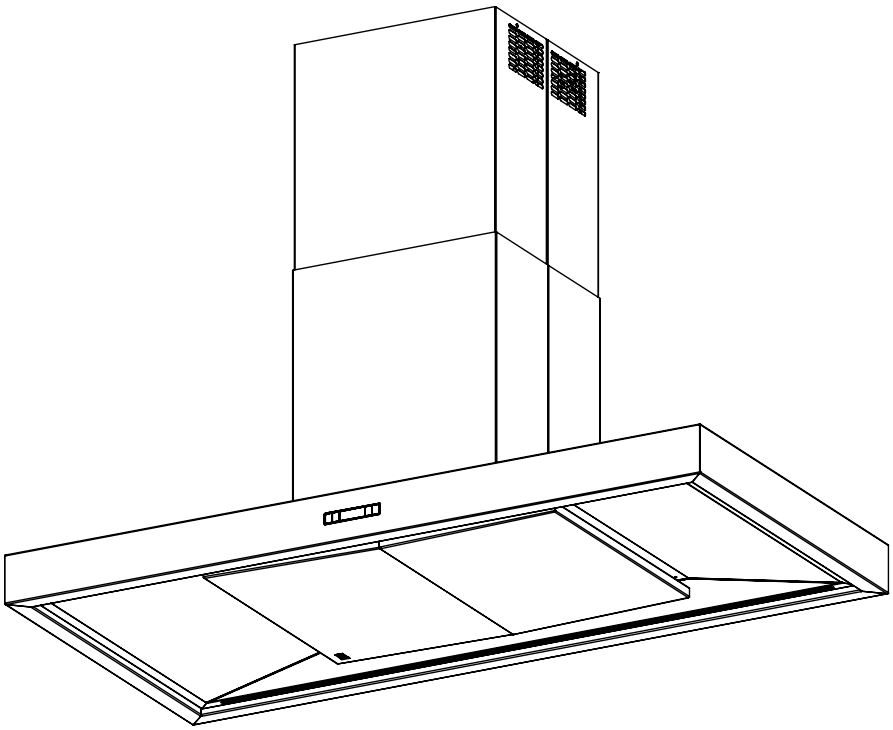

UNPACKING
Remove all items from the packaging. Retain the packaging. If items are missing or damaged, please contact Westin for assistance.

Bespoke Wall Mounted Extractor
Installation, Operating & Maintenance Instructions

1. INTRODUCTION

During the cooking process, there will be heat, vapours and fumes produced. Your Westin Extractor has been designed to complement your kitchen both in looks and performance in order to create a good environment for creative cooking.

2. IMPORTANT INFORMATION

The exhaust air **must not** be discharged into a flue which is used for exhausting fumes from non-electric appliances such as oil or gas-fired central heating boilers or gas-fired water heaters, etc.

Requirements of the relevant authorities concerning the discharge of exhaust air must be complied with.

Pay particular attention to fire risk when frying. To minimise the risk of fire, all instructions relating to cleaning the grease filters and removing grease deposits must be adhered to.

Do not flambé under the extractor.

WARNING

Proper care must be taken to ensure that the negative pressures caused by high performance extraction systems do not adversely affect the safe operation of certain types of fuel-burning appliances (gas, oil or solid fuel), including those installed in the kitchen and possibly those installed in other parts of the house.

Where such fuel-burning appliances are installed, adequate ventilation MUST be provided in the room of installation, located and sized such that the negative pressure in the room created by the extractor does not exceed 4Pa.

In case of doubt, do not operate the extractor and fuel-burning appliance(s) simultaneously and consult an appropriate (for the fuel type) expert for advice.

The clearance between the hob burners and the bottom surface of the cooker hood (extractor) should be within the following range, unless a greater distance is specified by the cooking appliance manufacturer:

Hob to underside of the cooker hood clearance distances:

- 650mm Minimum above electric hobs.
- 760mm Minimum above all gas hobs and gas or electric wok burners, griddles, fryers, open grills / barbeques.
- 850mm is the maximum recommended distance between the hob and underside of the cooker hood.

The minimum distance between the hob and the bottom of the cooker hood is essential for safety reasons and to prevent overheating of the extractor and its components.

Exceeding the maximum clearance distance will reduce how efficiently the cooker hood removes cooking fumes and odours.

Please also note that a 90º bend in 150mm flexible ducting will require 215mm minimum headroom to give a smooth radius with no kinking (see SECTION 4 for a detailed illustration).

You are advised to install measures designed to reduce the incidence of cold draughts entering the property via any ductwork.

For extractors with internal or inline fans, this should (at the very least) consist of an external duct termination with integrated non-return flaps (e.g. gravity shutter wall grille/louvre) and/or an inline backdraught shutter.

For wall-mounted fans an inline backdraught shutter is recommended.

3. EXTRACTION PERFORMANCE

The primary influence on the overall performance of the extractor is the design of the ducting which takes the exhaust air from the extractor to the outside. The duct route should be a prime consideration during the initial stages of the kitchen design (Westin do not recommend recirculating air back into the kitchen).

Please note the following:

- Easy access to the duct route during installation is important. Lack of access may require the “blind” fitting of flexible ducting, with increased risk of unseen kinks and impaired efficiency.
- The extractor is provided with a spigot (or spigots) suitable for connecting the ducting (Usually 150mm diameter).

  Because this is a bespoke *product, alternative arrangements may have been agreed during the design phase for connection of your ducting.*
- ***Note***: the cross-sectional area of the agreed duct size should not be reduced as this seriously reduces extraction efficiency.
- The most efficient configuration is to duct straight through an outside wall so try to plan the location of the cooker / cooker hood to accommodate the shortest duct route possible..
- Well installed, correctly sized rigid round ducting or an equivalent flat channel system will usually perform best, with round semi-rigid ducting being an alternative. Flexible ducting is economical but its use should be minimised as it gives the worst performance and should only be used for short duct runs or initial connection and should be pulled taut to prevent significant losses in extraction efficiency.
- For maximum efficiency, ducting should be kept as short and as straight as possible with a constant cross-sectional area being no less than that recommended by Westin. Bends in the duct will degrade performance so the number of bends in a duct run should be kept to a minimum and be gradual and smooth to prevent turbulence. Avoid kinks in flexible ducting, pulling it taut over straight runs to ensure that the internal surface is as smooth as possible.
- If using rigid ducting you may wish to consider making the initial duct connection to the extractor using semi-rigid (or flexible, if unavoidable) round ducting to facilitate easier installation and furture maintenance.

  If the duct spigot is accessible with the unit installed and it will remain so in the completed kitchen (e.g. behind a removable chimney) then no flexible connection need be used.
- Ducting and associated components, including complete kits, are available from Westin.

ELECTRICAL SAFETY

This appliance requires an earth connection.

Ensure that the supply voltage corresponds to that marked on the rating label inside the extractor.

The extractor must be isolated from the electrical supply before carrying out any cleaning or maintenance operations.

4. INSTALLATION

This document provides detailed guidance for a typical installation, however not all installations can be accommodated within this guide.

If you are unsure how to proceed then please call Westin for assistance.

The island hood is fitted with a load bearing chimney section. The upper cladding panel will need to be removed in order to access the duct spigot, electrical supply cords and any other electrical connections specified.

The island hood is fitted is supplied with a ceiling fixing bracket which is screwed/bolted to provisions you must make in the ceiling (fixings are not supplied). This fixing bracket should be separated from the chimney prior to installation.

General Installation

Open the appliance door by pulling from the right to release the magnets. The door is hinged to reveal the filter. Remove the filter (as described in SECTION 7).

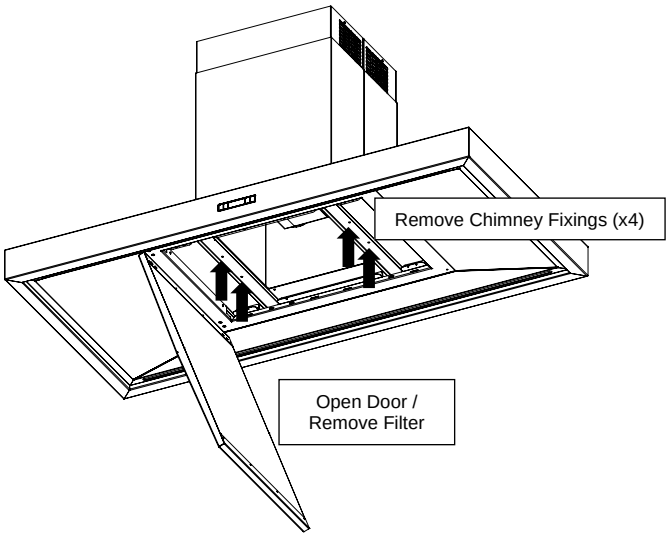

Once the filter has been removed, locate & remove the 4 fixing screws that retain the lower chimney (see above illustration).

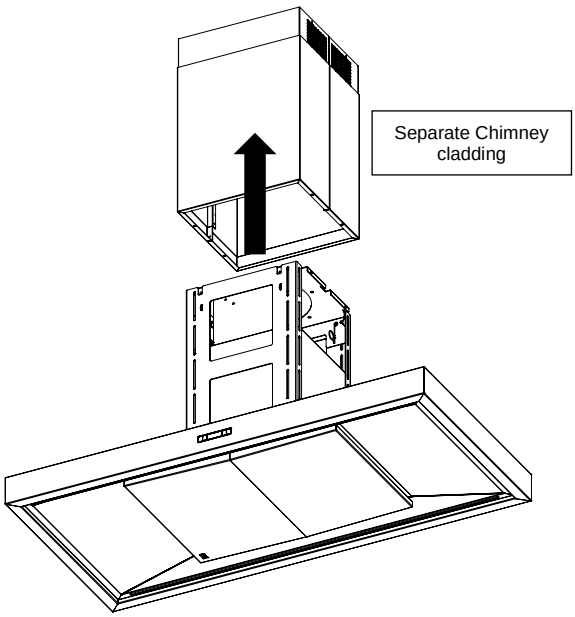

Separate the chimney sections from the appliance.

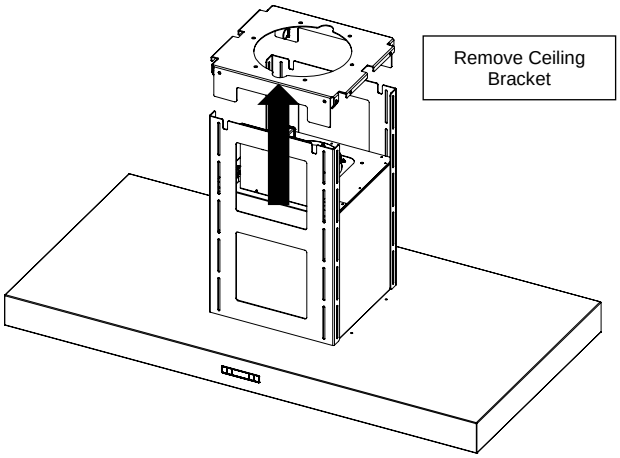

Remove the screws retaining the ceiling bracket to release the bracket (see above illustration).

Positioning & Fixing the Chimney Bracket

The chimney bracket requires a secure fixing to the ceiling via the six 8mm diameter holes. In order to accurately position the chimney bracket on the ceiling; position the ceiling bracket against the ceiling and mark the chimney bracket fixing position. Fit the chimney bracket to the ceiling using the most suitable fixing for the type of ceiling. Ensure that the bracket is level.

In preparation for the electrical installation phase, route and position the power cable so it can be easily accessed once the chimney has been installed.

Setting the Chimney Height

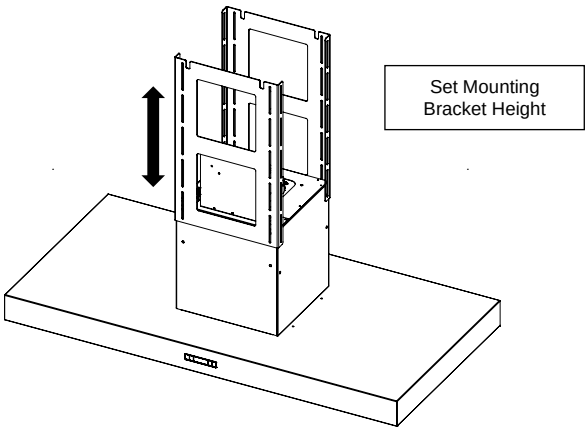

Set the two mounting brackets at the correct height to give the desired chimney height. (see above & below images)

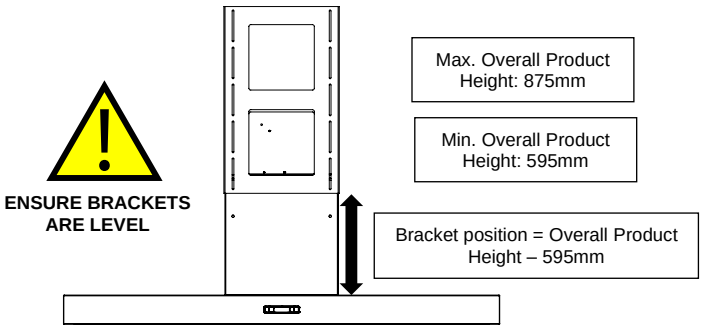

Ensure the mounting brackets are fixed securely to the appliance via at least 8 fixing screws. If the slots in the mounting bracket align with the 8 lower fixing holes, use these also. If the mounting brackets do not align with the lower fixing holes (i.e. chimney at max. extension), simply screw x8 fixings into the holes to blank off.

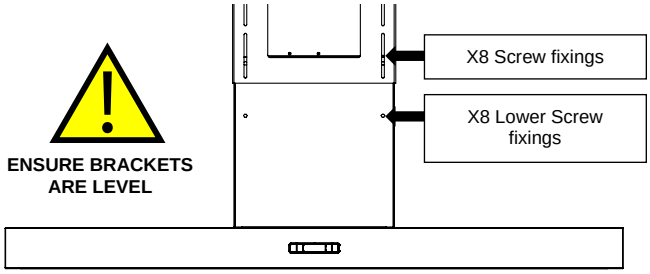

In preparation for the electrical installation phase, route and position the power cable so it can be easily accessed once the chimney has been installed.

Duct Installation

Install ducting taking note of the advice given in SECTIONS 2 and 3. Westin recommend using a length of semi-rigid ducting for the final connection to the extractor spigot as this will allow the unit to be pushed into final position with the duct connected. If your extractor has multiple spigots, you will usually require separate duct runs to the outside or to the remote fan(s).

If terminating on an outside wall, a suitable weather louvre should be fitted. Various ducting components and complete kits are available from Westin to suit most installations.

If using expanding foam, make sure any flexible ducting is supported internally to prevent it crushing.

For roof or chimney duct terminations, please contact Westin or seek alternative specialist advice.

- **Recirculating Models**

For recirculating installations, adequate provision must be made for exhausted air to return into the kitchen (usually equivalent to 150mm round duct per fan) so do not block the vents provided. Failure to do so may cause the unit to overheat and fail and will invalidate your warranty.

Westin standard SEM and SEM EL remote motors.

Two styles of SEM motor are supplied, a pre energy label version (SEM) and an energy label version (SEM EL) and each style is wired differently.

- **For SEM 1,2,7 or 8 motors**, there will be a 6 pin socket and a smaller two pin socket, usually mounted close to the spigot, for connection of the fan. This socket may be inside the hood with provision for bringing in the cable and plug – alternative provisions may have been agreed during the design phase. The SEM1, 2, 7 or 8 fan comes with 5m of 6 core cable fitted with a special 6 pin plug (on some models, a two pin plug).
- **For SEM 1EL, 2EL, 7EL or 8EL motors**, there is a black plastic box, usually outside the extractor (on flying leads), containing electrical terminals for connection to the remote motor cable assembly. This box is referred to as the remote motor terminal box.

Each terminal inside the remote motor terminal box has one side connected to a coloured wire, which leads back to the hood control system. The remote motor cable assembly also has coloured wires and these are connected to the empty terminals. Such corresponding colours are opposite and connect to each other; i.e. red connects to red, blue to blue, and so on.

Not all coloured terminals will be used because each remote motor type is configured differently.

Detailed illustrations and wiring instructions for SEM EL remote motors can be found on page 6.

Fan extension kits for standard SEM and SEM EL fans are available from *Westin.* Alternatively, providing you use an electrician to carry out the work, the cable can be extended using suitable flex. Ensure that where the cable has been cut the numbered or coloured wires are re-connected correctly.

Other remote motors

Hoods intended for use with alternative remote fans will have suitable provisions for their electrical connection (usually Live, Neutral and Earth terminals, switched by the extractor) – these provisions will usually be labelled to avoid confusion.

The fan should be installed in accordance with any installation instructions that accompany it.

No separate power supply is required for external fans supplied by Westin.

Because this is a custom-made product, it may have been specified to control a fan that has not been supplied by Westin. Where this is the case the provision of power to the fan will have been agreed during the design phase and in some installations may require a separate power supply for the fan.

Fixing the Extractor to the Wall

Fixing the extractor safely into position requires two people, so do not start if assistance is unavailable.

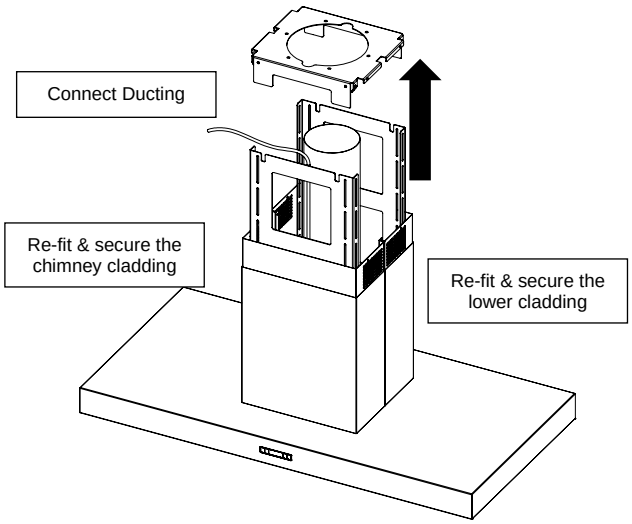

Re-fit the chimney and cladding. Secure the lower cladding to the appliance using the four fixing screws removed previously.

Terminate the ducting and then offer the mounting brackets up towards the ceiling bracket. Fix the mounting brackets to the ceiling bracket via 8 screws.

The supporting wall must be of good quality, have an even surface and be sturdy enough to support the extractor.

Fixings must be used which are suitable for the type of wall construction.

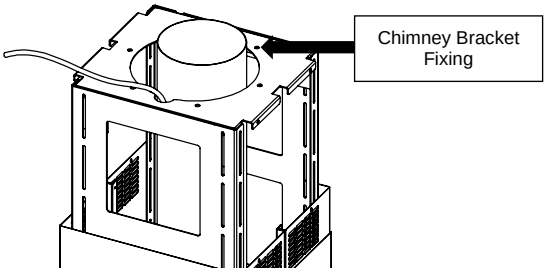

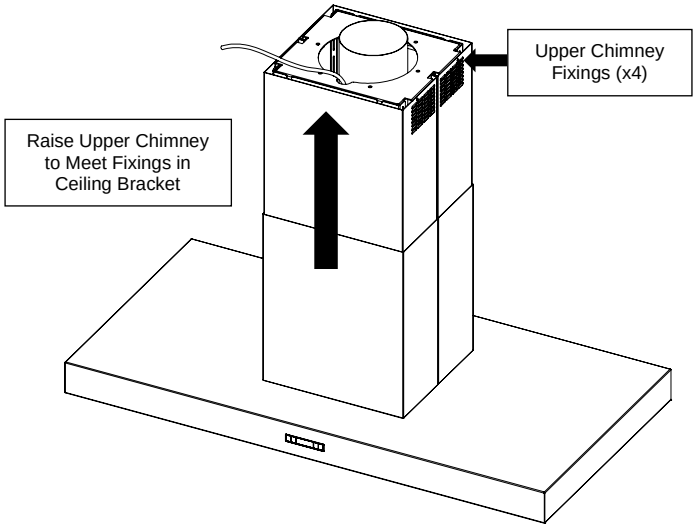

Connecting the Ducting

Terminate the ducting where it exits the building. If using a wall mount weather louvre, secure the ducting to the louvre spigot and attach the louvre to the wall. Ensure that the air fins are directed downwards. If you are fitting an alternative termination without a spigot, ensure that the ducting is secure.

If using expanding foam, make sure that flexible ducting is supported internally to prevent it crushing or use rigid ducting through the wall where foamed.

Install remaining ductwork ensuring any flexible ducting is taut and smooth. Secure ducting to the extractor exhaust spigot(s) using straps supplied in Westin ducting kits or a suitable alternative, e.g. jubilee clip, do not use duct tape as the only fixing.

Check that the duct has not been flattened or kinked

- **Electrical Installation**

**ELECTRICAL HAZARD.
DISCONNECT ELECTRICAL SUPPLY BEFORE PROCEEDING FURTHER**

The extractor is a stationary appliance designed to be connected by fixed wiring to the electrical supply. A competent electrical technician must perform the electrical installation.

The hood must be fed from a 230Vac single phase electrical supply using a switched spur fitted with a 3A fuse. The spur should be located adjacent to the hood/cooker so that the supply can be disconnected from the hood using the switch. The means of disconnection from the supply must have a minimum contact separation of 3mm in all poles. Alternatively, a means of disconnection in the fixed wiring according to the relevant wiring rules must be fitted.

A supply cord for connecting the spur to the extractor is included. The mains supply is connected to the free end of this cord as follows:

INCOMING SUPPLY CORD CONNECTIONS	
Core	**Core Colour**
Live	Brown
Neutral	Blue
Protective Earth	Green/Yellow

Make electrical connections for any remote motors, as described earlier.

As a bespoke it may be that other electrical connections were agreed for your hood, such as connections to control the lighting from elsewhere or to operate other electrical devices. Make any remaining electrical connections now.

Removing the Motor Transport Ties (If Fitted) (see fig.2)

Note: Transport Ties are only used on smaller appliances to protect the motor during unpalletised transit.

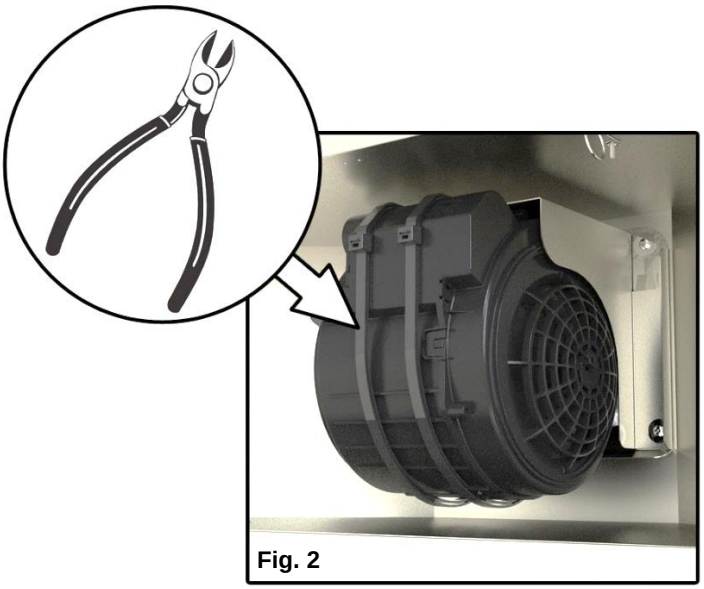

Fig. 2

Finalise Installation

Finish the installation by re-fitting any parts previously removed and attach any parts supplied separately.

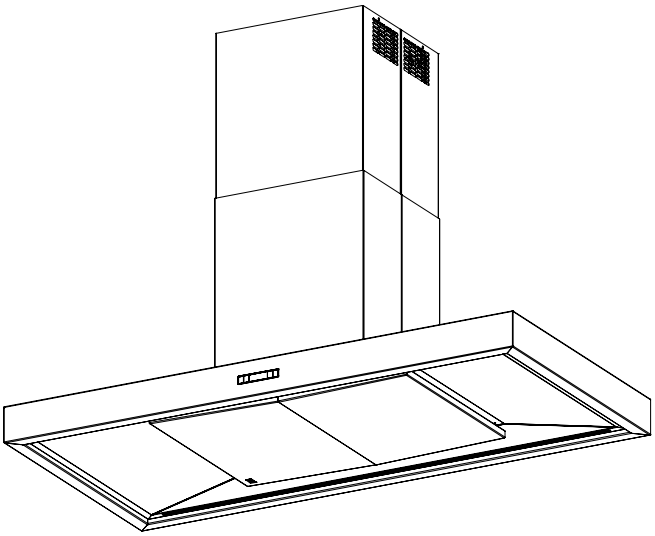

MARTELLI EDGE 900 / 1200 LAYOUT
INTERNAL MOTOR

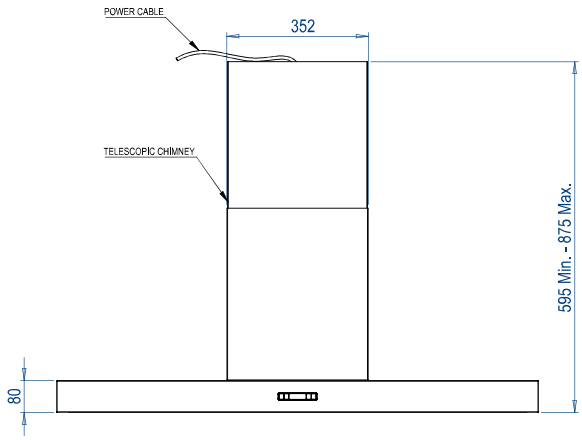

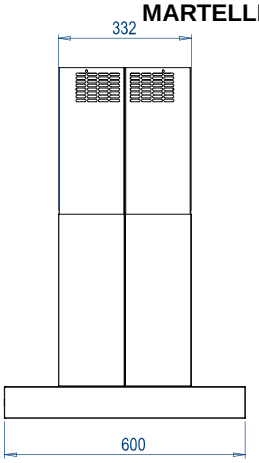

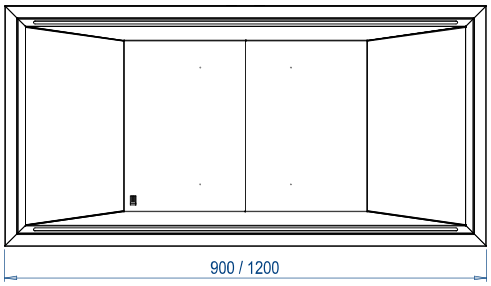

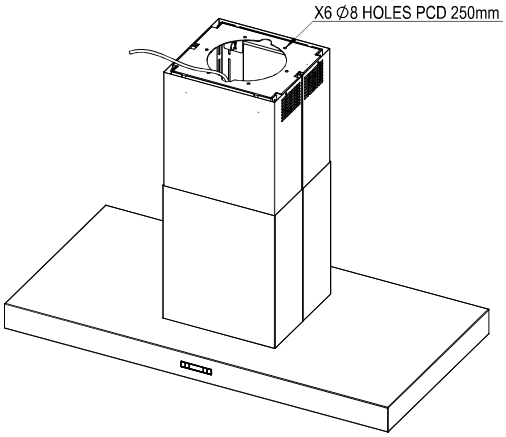

MARTELLI EDGE 900 / 1200 LAYOUT
EXTERNAL MOTOR

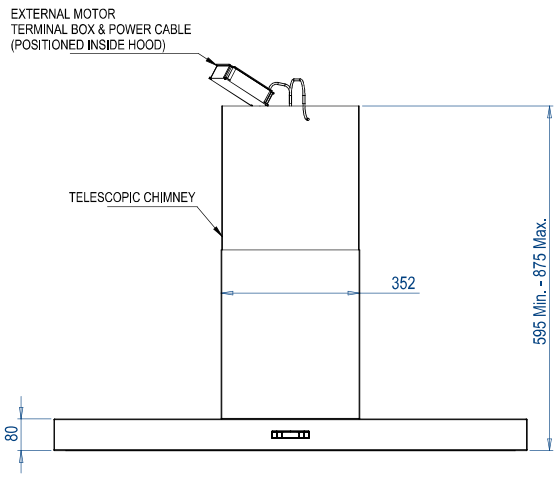

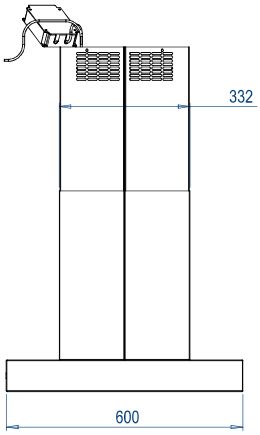

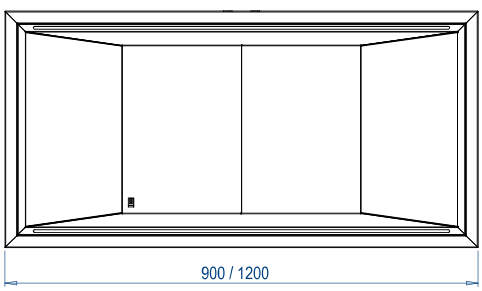

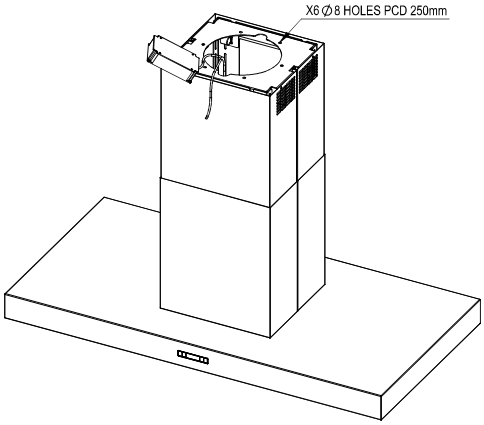

MARTELLI EDGE 900 / 1200 LAYOUT
INTERNAL MOTOR
EXPLODED PARTS LIST

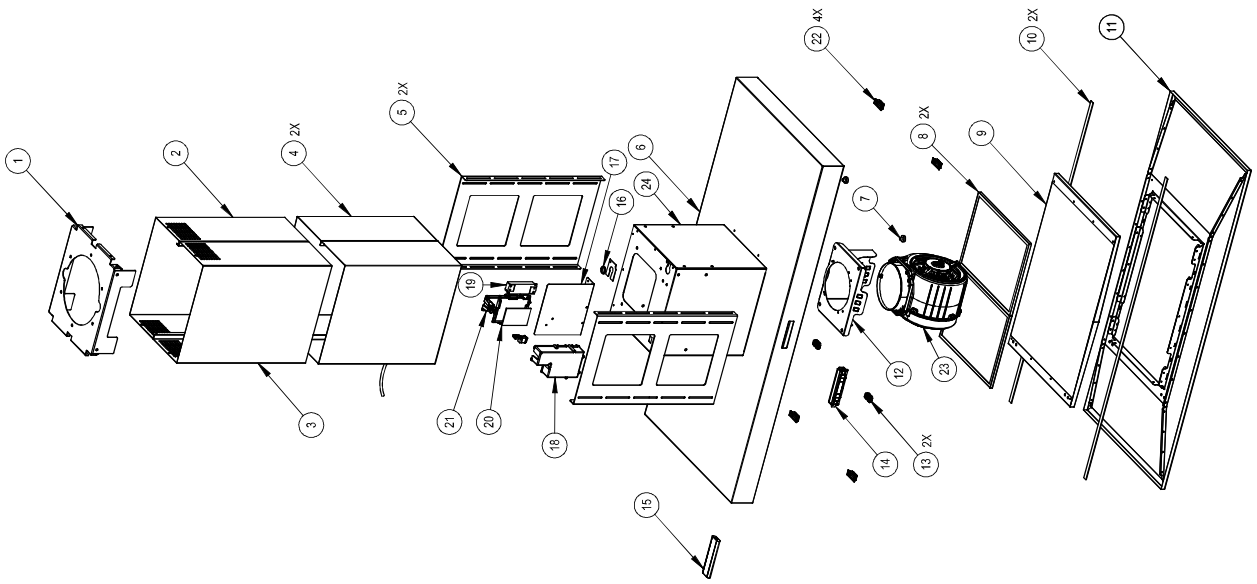

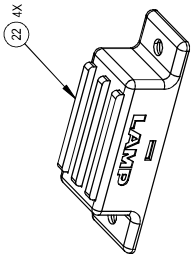

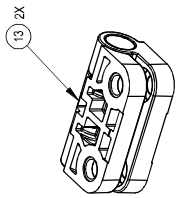

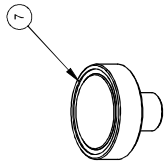

NO.	Part Name	Part Number	Notes & Special Ordering Instructions
1	Ceiling Bracket	Made to Order	
2	Upper Chimney Cladding (Rear)	Made to Order	
3	Upper Chimney Cladding (Front)	Made to Order	
4	Lower Chimney Cladding	Made to Order	
5	Chimney Mounting Bracket	Made to Order	
6	Extractor Body	Made to Order	State Hood Width
7	Door Magnet	W1107	
8	Grease Filter	W0790 for 900mm Wide Version W0711 (X2) for 1200mm Wide Version	
9	Extractor Door	Made to Order	State Hood Width
10	LED Light Strip	W1792 for 900mm Wide Version W1793 for 1200mm Wide Version	
11	Base Plate	Made to Order	State Hood Width
12	Motor Bracket	Made to Order	
13	Door Hinge	W1780	
14	LCD Pushbutton Module	W1801	
15	Remote Control	W1798	
16	Cable Gromet	W1451	
17	Mounting Bracket (Electrics)	Made to Order	
18	Circuit Board Housing	*W0419 - *W0421 - *W0422	
19	LED Driver	W1389	
20	Circuit Board	*W1836	
21	Circuit Board Housing Lid	*W0420	
22	Base Plate Support Magnet	W1758	
23	Motor	*W1437	
24	Extractor Top Box	Made to Order	State Internal Motor
	Internal Motor Assembly	W1788	*Parts Included With Assembly

MARTELLI EDGE 900 / 1200 LAYOUT
EXTERNAL MOTOR
EXPLODED PARTS LIST

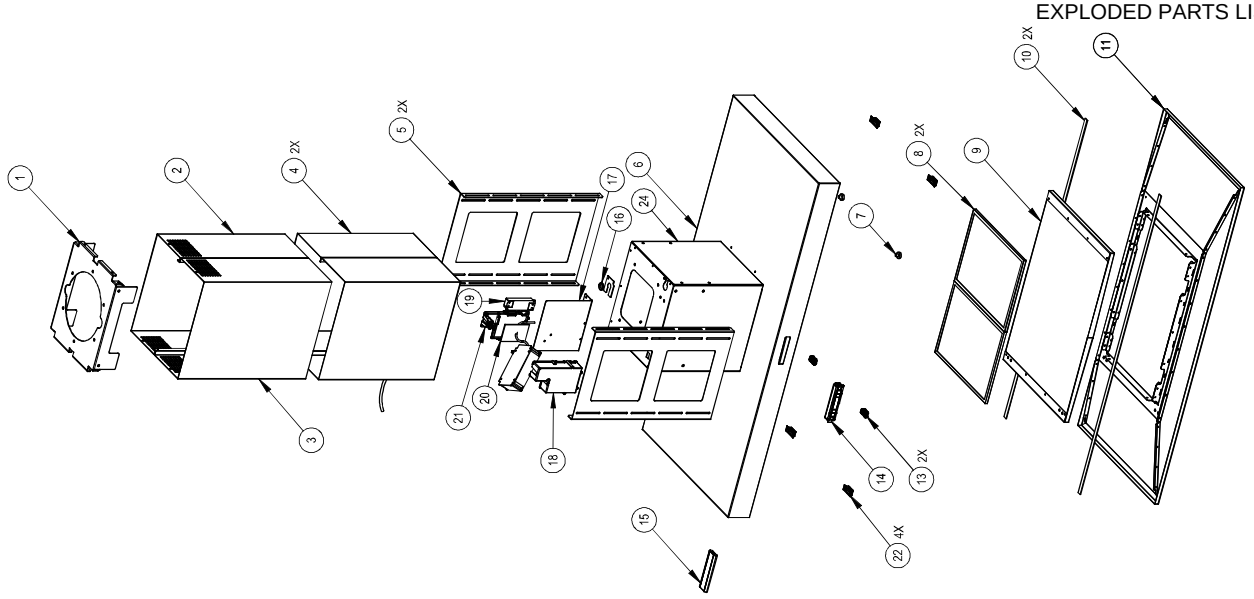

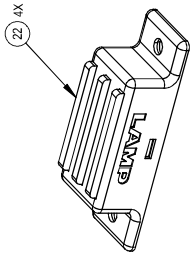

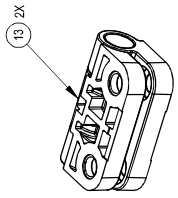

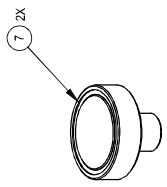

NO.	Part Name	Part Number	Notes & Special Ordering Instructions
1	Ceiling Bracket	Made to Order	
2	Upper Chimney Cladding (Rear)	Made to Order	
3	Upper Chimney Cladding (Front)	Made to Order	
4	Lower Chimney Cladding	Made to Order	
5	Chimney Mounting Bracket	Made to Order	
6	Extractor Body	Made to Order	State Hood Width
7	Door Magnet	W1107	
8	Grease Filter	W0790 for 900mm Wide Version W0711 (X2) for 1200mm Wide Version	
9	Extractor Door	Made to Order	State Hood Width
10	LED Light Strip	W1792 for 900mm Wide Version W1793 for 1200mm Wide Version	
11	Base Plate	Made to Order	State Hood Width
12	Motor Bracket	Made to Order	
13	Door Hinge	W1780	
14	LCD Pushbutton Module	W1801	
15	Remote Control	W1798	
16	Cable Gromet	W1451	
17	Mounting Bracket (Electrics)	Made to Order	
18	Circuit Board Housing	*W0419 - *W0421 - *W0422	
19	LED Driver	W1389	
20	Circuit Board	*W1836	
21	Circuit Board Housing Lid	*W0420	
22	Base Plate Support Magnet	W1758	
24	Extractor Top Box	Made to Order	State External Motor
	Internal Motor Assembly	W1789	*Parts Included With Assembly

5. SEM EL REMOTE MOTOR WIRING

The wiring illustrations below apply to SEM EL Motors only.

The below diagram shows a typical SEM EL wiring schematic. the appliance is supplied with an external terminal box that requires connecting to the external motor.

In order to access the electrical terminals, remove the fixing screws from the external terminal box lid. Refer to fig. 2 & 3 for details of how to wire the SEM 1/2 or SEM 7/8 correctly.

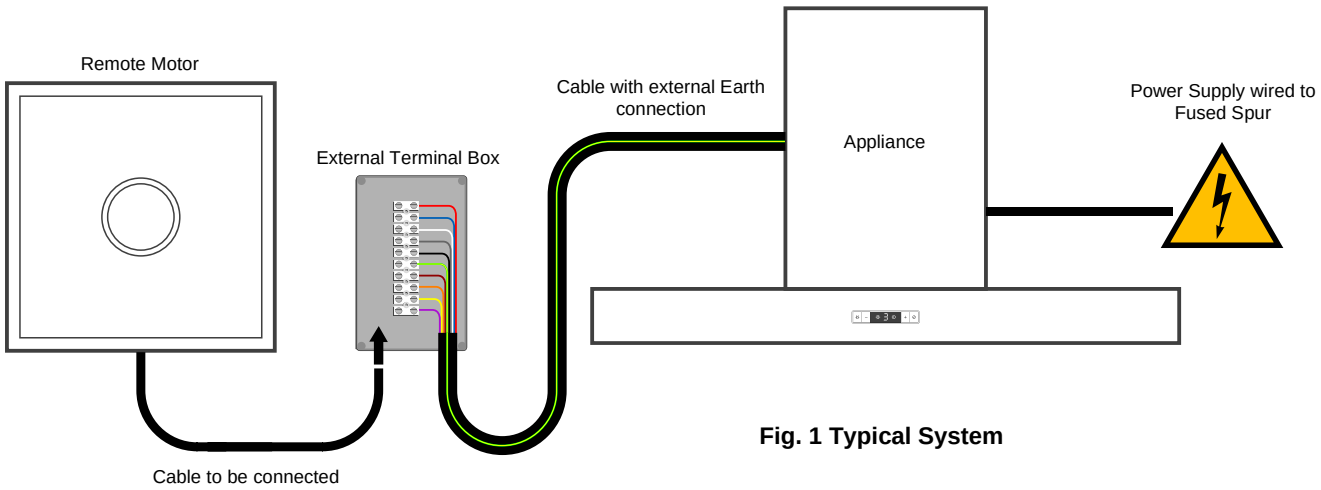

Fig. 1 Typical System

Fig. 2 Terminal Colour Positions

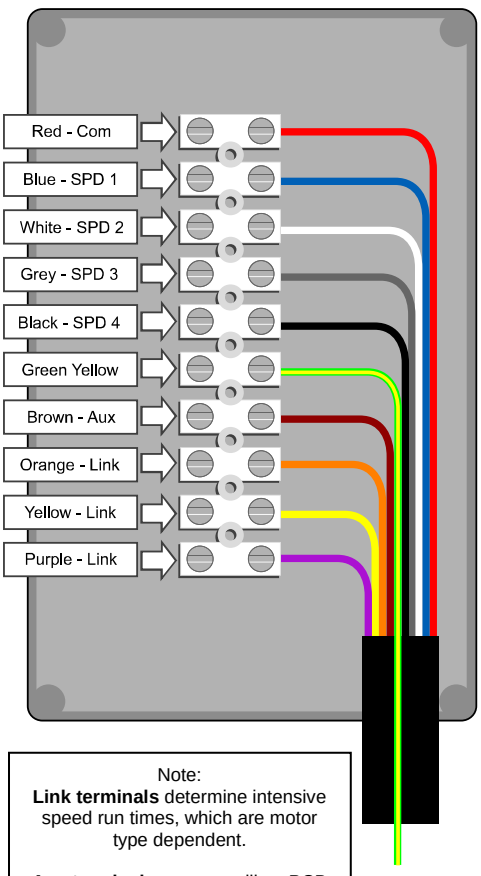

Note:
Link terminals determine intensive speed run times, which are motor type dependent.

Aux terminal powers auxiliary PCB in some motors.

Fig. 3 SEM 1 / SEM 2 Electrical Connections

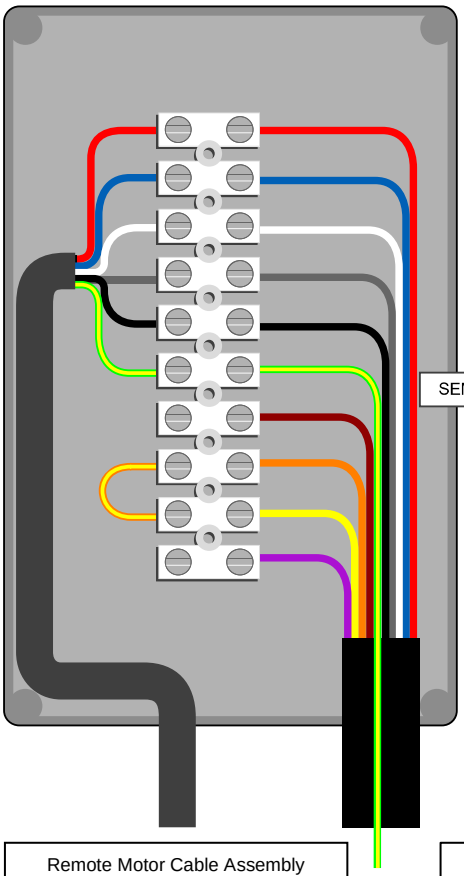

Remote Motor Cable Assembly Orange/Yellow link wire is included

Fig. 4 SEM 7 / SEM 8 Electrical Connections

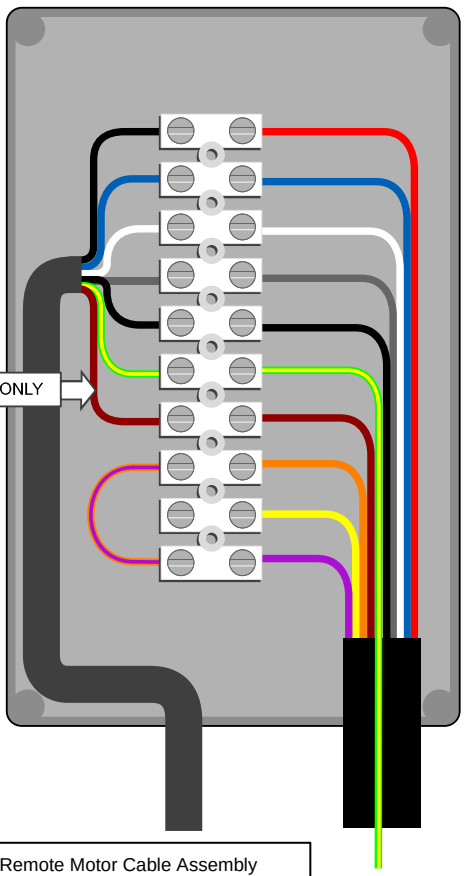

Remote Motor Cable Assembly (Orange/Purple link wire is included)

6. OPERATING INSTRUCTIONS

Radio Remote Controlled Models

- Switch on the power at the fused spur.
- Then Immediately turn on the remote control (⏻).
- Then immediately press and hold (☼) until the lights illuminate.

Should the extractor fail to respond to commands from the remote-control, please check that the power is 'on' and the internal appliance reset switch is in the 'ON' position (factory default). The reset switch is a latching red push-switch located in the chamber behind the door panel / filter.

If you experience interference problems, or the remote appears to be faulty from new, then a different radio transmission code may be required.

Refer to the instruction leaflet included with the remote control regarding transmission code changes before seeking assistance.

Remote Control Functions

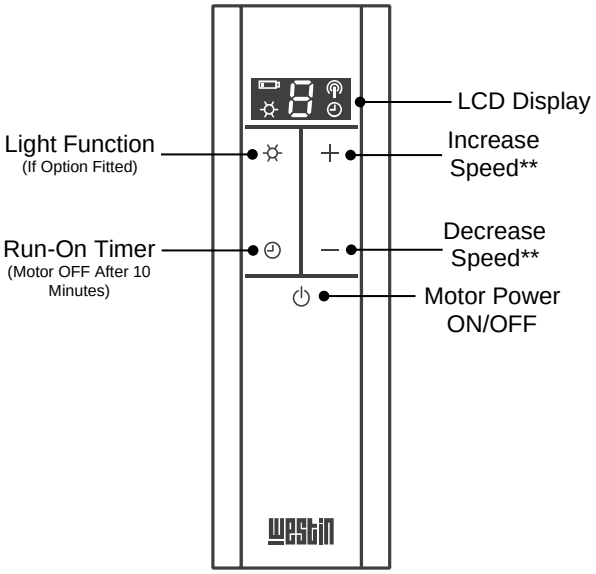

** The automatic speed reduction feature is required by EU Ecodesign and Energy Labelling Commission Legislation 65/2015 66/2014 in order to satisfy Directive 2009/125 EC*

The extractor controller will automatically switch off the appliance if there has been no operator action for 4 hours.

Refer to the instruction leaflet included with the radio remote control console regarding pairing the device, transmission codes and factory reset procedures.

Pushbutton Models

Pushbutton Functions
(for models with pushbutton controls)

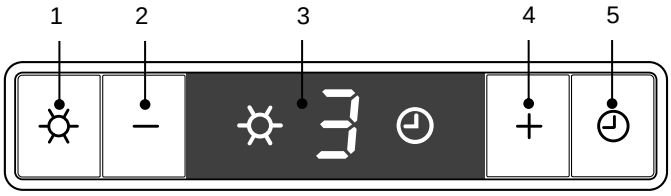

1. Lights ON/OFF
2. REDUCE Fan Speed**
3. Primary Display
4. INCREASE Fan Speed**
5. Motor Run-On Timer
   (Turns Appliance off after 10 minutes)

**Speed 4 reduces automatically to Speed 3 after 5 minutes

The extractor controller automatically switches off the appliance if there has been no operator action for 4 hours.

After 30 hours accumulated running: **Grease Filter Cleaning** will be signaled by all the icons on the Primary Display flashing. Reset the display by pressing (◴)

Light Dimming

To adjust the light intensity, press & hold (☼) until desired intensity is set.

Colour Changing

Ensure that the fan & timer are off. Then press and hold (☼) until the desired light colour is achieved. Press (◴) to exit the setting.

Other Control Systems

Because this is a custom-made product, an alternative control system may have been specified during the design phase.

Most commonly this alternative control system will be a continuously variable rotary fan speed controller plus light control mounted on the extractor (usually the baseplate). With most such control systems, you will find on/off switches for the fan and lights and a rotating knob to adjust the fan speed. Sometimes the switch and knob are combined into a single unit, like a domestic lighting dimmer switch, which is pressed for on/off function and turned for speed.

In some cases, the fan control may have been specified as a separate item that does not form part of the extractor (e.g. a wall mounted controller). Such controllers may have been supplied by Westin or a third party and are not covered by this manual.

If you are unsure how to operate your unit then please call Westin for assistance.

7. MAINTENANCE

Regular maintenance is essential to ensure good performance and long-life.

CAUTION.

To minimise the risk of fire, all instructions relating to cleaning the grease filters and removing grease deposits must be adhered to.

To maintain the immaculate appearance of the extractor, and to minimise fire risk, ensure that grease deposits on the extractor surfaces are kept to a minimum by regular cleaning.

To clean the stainless-steel surfaces of the extractor, use a soft cloth and a suitable cleaning agent, such as a specially produced stainless-steel cleaner or washing up detergent and warm water.

Painted surfaces should be cleaned using a soft cloth, detergent and warm water.

Glass surfaces should be cleaned with a suitable glass cleaning agent.

Do not use abrasive cleaning materials or products.

Do not use bleach-based cleaning materials or products.

Clean the grease filters in a dishwasher or by hand-washing in hot water and detergent every 2 months - sooner if the extractor is used extensively and filters become grease laden.

If your hood has mesh grease filters, you can expect years of service from them however, they are considered a consumable item and may deteriorate over time and need replacement, particularly when cleaned in a dishwasher. For dishwasher users adhering to a 2 monthly cleaning interval, we recommend grease filter replacement every 5 years to maintain optimum performance, even if they show no visible signs of deterioration. For all users, filters should be replaced whenever they exhibit signs of physical wear.

Removing the Grease Filters

Most Westin hoods are fitted with clip-in filters that have an integrated sprung latch mechanism.

Release the latch by pulling the lever and remove the filter. The filter is replaced by locating the fixed tabs opposite the lever catch into corresponding slots in the baseplate and then pushing the filter into position with the latch held open. Once the filter is in position carefully release the lever, allowing the latch to engage.

For units supplied with concealed filters, the filters are located behind a hinged panel. This panel is held shut with magnetic catches. Open the panel by grasping it in corners opposite the hinged side.

LED replacement

The long-life LED units are not designed for end user replacement. In the unlikely event of failure please call Westin to arrange a Service Call.

Caring for HP4 high efficiency carbon filters (Recirculating hoods only).

To restore and regenerate high efficiency HP4 carbon filters, they must be washed in the dishwasher (without other dishes or cookware) and then be placed into an oven for 1 hour at max 90°C.

HP4 filters should be washed whenever they are dirty or lose effectiveness (at least every two months).

Regular washing and regeneration will maximise the efficiency and lifespan of these filters.

These filters can be regenerated repeatedly but are considered a consumable and will eventually deteriorate, after which they should be replaced. The time this takes will depend on the style of cooking but they can be expected to deliver excellent service under normal use conditions, although replacement is recommended at least every two years.

8. SPECIFICATIONS

A 3A fuse for the electrical supply is usually sufficient. Units with multiple fans fitted may require a 5A fuse.

In all cases, because this is a custom made product you must refer to the rating plate inside the extractor and any remote motor and consult with your electrician to determine the correct electrical supply fuse required to protect you, your property and the appliance.

If your unit has been supplied to work with a remote or third party fan then you should consult the rating plate of both the extractor and fan(s) in order to determine the electrical load of the system and size your fuse accordingly.

Electrical System - All Models	
Supply voltage:	230V~ 50Hz
LED voltage (17.5w per strip)	12V
Total power:	See rating plate
Commonly Used Motor Specifications (For unlisted motors see motor rating plate)	
Units with Internal GPE800 Blower	
Fan airflow in free air:	800 m^3/hr
Fan power input:	275W
Fan spigot diameter:	150mm
Units with Internal EC220 Fan	
Fan airflow in free air:	1,000 m^3/hr
Fan power input:	150W
Units with SEM1 Inline Fan	
Fan airflow in free air:	800 m^3/hr
Blower power input:	275W
Units with SEM2 External Wall Fan	
Fan airflow in free air:	1,000 m^3/hr
Fan power input:	150W
Units with SEM7 External Wall Fan	
SEM7 airflow, in free air: 200mm Dia Duct	1,700 m^3/hr
SEM7 airflow, in free air: 150mm Dia Duct	1,500 m^3/hr
Fan power input:	490W
Note: The fan has a 200mm diameter spigot and is supplied with a reducer for connection to 150mm ducting.	
Units with SEM8 Inline Fan	
SEM8 airflow, in free air: 200mm Dia Duct	1,300 m^3/hr
SEM8 airflow, in free air: 150mm Dia Duct	1,100 m^3/hr
Fan power input:	250W
Note: The fan has a 200mm diameter spigot and is supplied with a reducer for connection to 150mm ducting.	

Do not install ducting smaller in diameter than that agreed with Westin or than the extractor duct spigot diameter as to do so will reduce performance and may damage the product.

W S Westin Ltd, Phoenix Mills, Leeds Road,
Huddersfield, HD1 6NG, UK
Tel: 01484 421585 Fax: 01484 432420
Email: sales@westin.co.uk
www.westin.co.uk